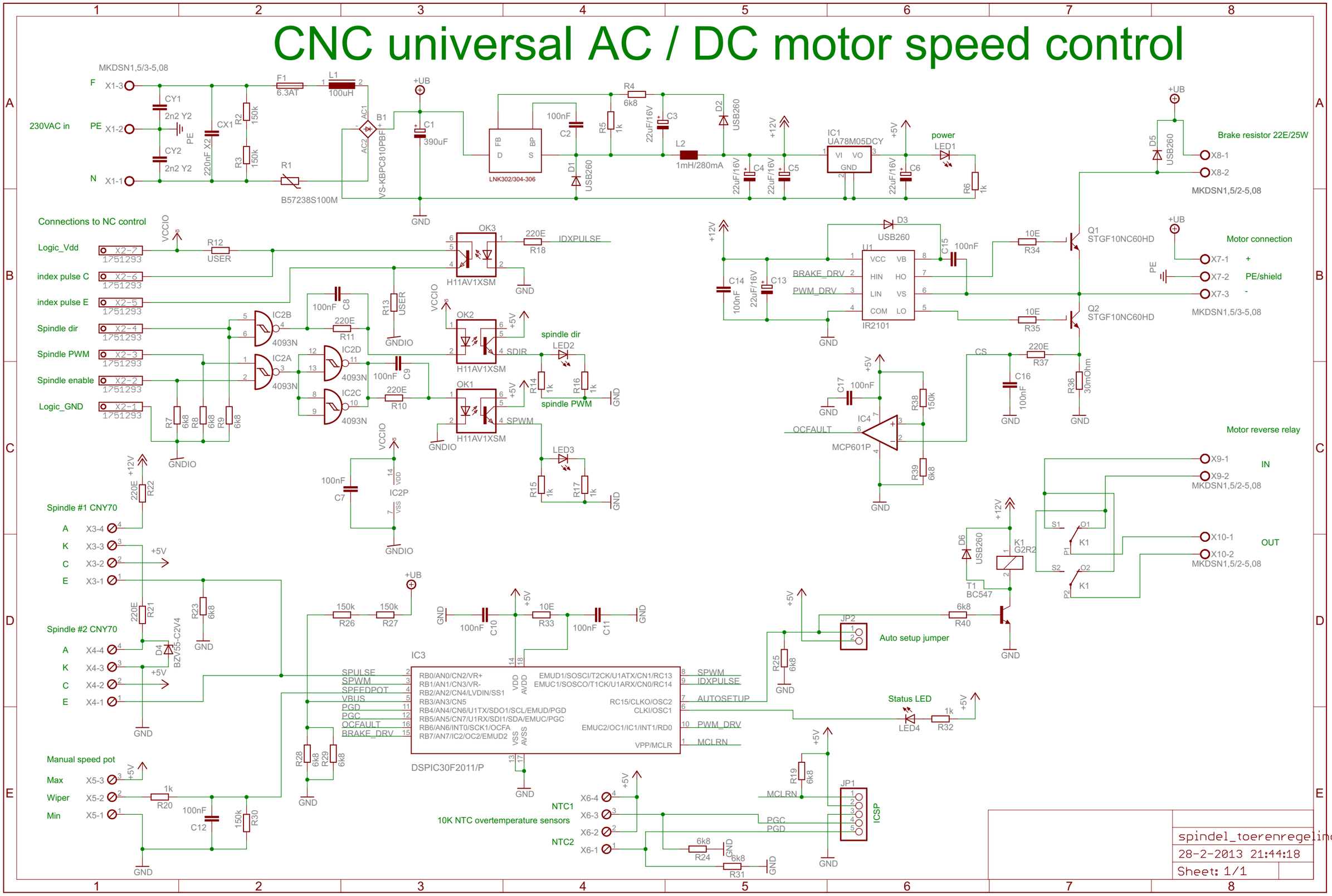CNC universal AC / DC motor speed control